IZH-53M AIR PISTOL

Certificate

1 INTRODUCTION

1.1 Before using the pistol, familiarize yourself with this Certificate. The Certificate describes briefly the main technical data, design and operating instructions for the pistol.
1.2 For designation of pistol parts and assembly units refer to figures and tables.
1.3 Since the pistol design is refined continuously to improve reliability and performance, it is subject to change without special notice.

2 PURPOSE

The IZH-53M Air Pistol (Fig. 1) is intended for shooting with lead pellets of the Diabolo type in 4.5 mm caliber at an ambient temperature from -1°Ñ to +50°C.

3 SPECIFICATIONS

Caliber 4.5 mm
Overall dimensions, approx. 407x175x50 mm
Barrel length, approx. 215 mm
Trigger pull 5-15 N (0.5-1.5 kgf)
Weight, approx. 1.2 kg

4 SET OF DELIVERED ITEMS

4.1 For set of delivered items refer to Table 1.

Table 1

Item	Qty
Pistol	1
Piston cup	1
Cleaning rod	1

Table 1

Item	Qty
Sight leaf	1
Packing case	1
Certificate	1

5 DESIGN AND PRINCIPLE OF OPERATION

5.1 The pistol design is simple and reliable.
5.2 The pistol is cocked by swinging the barrel which is blocked in intermediate positions.
5.3 The pellet is propelled out of the barrel under the action of air compressed inside the cylinder by the fast-acting piston which is actuated by the precompressed spring.
5.4 The barrel is fixed securely inside the receiver by the locking mechanism.
5.5 The rear sight allows adjustment of fire for elevation and windage.
5.5.1 Using the adjustment screw 26 for moving the sight leaf 29 (Fig. 2), you can adjust the rear sight for windage.
5.5.2 Adjustment for elevation can be made by moving the sight frame 34 upwards using the adjustment screw 35.
5.5.3 To move the rear sight 2 loose the retaining screw 20, move the rear sight to the required position and tighten the retaining screw.
5.6 Safe handling is ensured by safeties.
5.7 Adjustment of the trigger travel is made by turning the adjustment screw 31 through the hole in the trigger guard. Turning the adjustment screw clockwise reduces the engagement of the piston sear with the trigger sear and decreases the trigger travel, turning the adjustment screw counterclockwise increases the trigger travel.
When the adjustment screw is clockwise overturned the sear may not engage the piston. In this case the blocking will not allow you to swing the barrel to its rest position. To unblock the pistol, detach the grip and turn the adjustment screw counterclockwise until you can cock the pistol.
5.8 On a new pistol, adjust the trigger travel within 2-3.5 mm as follows:
– make sure there is no a pellet in the barrel;
– cock the pistol;
– turn the adjustment screw clockwise up to fire;
– give the adjustment screw a three-quaters of a turn counterclockwise.
5.9 The pistol barrel is made of high-quality steel by cold forging.
The pistol grip is made of plastic.
5.10 Always consider your pistol ready for fire.

6 SAFETY PRECAUTIONS

6.1 Though the pistol you use has various safeties, it may become dangerous, if you handle it carelessly. It is recommended to follow all safety instructions closely.
6.2 When choosing the direction of fire, keep in mind that the pistol is dangerous at a distance of up to 100 m.
6.3 Point the pistol at a target only.
6.4 When firing you must not:
– point the pistol at people;
– leave or store the pistol loaded or cocked;
– pull the trigger when cocking.
6.5 After firing, make sure the pistol is unloaded. If a pellet is left in the barrel, fire in the direction of a target.

7 OPERATIONAL PROCEDURES

7.1 To prepare the pistol for operation:
– remove a preservative grease out of the barrel bore and outer surfaces of the pistol;
– examine outer pistol surfaces for cracks and breakages.
7.2 To cock the pistol:
– hold the grip with one hand while pressing the front sight base down with the second hand to open the barrel;
– swing the barrel up to stop against the mainspring force, the piston will be engaged;
– insert a pellet into the barrel;
– swing the barrel back until it locks in its rest position.
7.3 Now you are ready to fire.
7.4 While operating the pistol, follow the instructions indicated in "Safety Precautions" closely.

8 MAINTENANCE

8.1 Proper handling and maintenance extend the pistol service life and ensure perfect functioning. Complete disassembly is not recommended
if it is not required.
8.2 Use pellets designed for the air weapon only.
8.3 Disassemble the pistol only for maintenance and repair. Disassembling procedure is as follows:
– take the grip screw out and detach the grip 32 (Fig. 2);

– detach the rear insert 15, place the pistol vertically resting the rear insert on the desk with one hand, drift the pin 30 out with the other hand. Do it carefully as the rear insert at detachment moves very fast under the action of the compressed spring;
– remove the mainspring 14;
– detach the sear 10, the trigger sear 17 and the trigger 18, but first, drift their pins out and remove the trigger travel adjustment screw 31;
10
– drift the pin 12 out and move the cocking lever to its rear position to remove the pin;
– remove the piston 7;
– swing the barrel 1 around the barrel pivot 3 through a slight angle and remove the barrel pivot 3;
– detach the barrel 1 with the hinge 22 from the receiver 8;
– push the self-releasing latch pin out and pressing the latch 23 remove the punch, the latch 23 and the lutch spring 24.
8.4 Reassemble the pistol in the reverse order. When reassembling, take care not to damage the piston cup 6 by the slot in the receiver 8.
8.5 If you find air leakage between the breech and the receiver 8, turn the barrel gasket 5 over (the front end facing inward) inside the seat.
8.6 Tighten the grip screws and the barrel pin 3 every 500-1000 shots. If the barrel pin 3 or its nut becomes very loose, exchange their places by inserting the pin head in the seat where the nut has been placed initially.
8.7 Lubricate parts of the trigger mechanism and barrel locking unit every 1500-2000 shots. Use any type lubricant.
For the piston, the piston cup and cylinder use only special lubricant with a high flash point designed specifically for use inside the air compression chamber. Clean the barrel bore every 500-1000 shots.
8.8 Keep the pistol in a dry place with the piston 7 disengaged to avoid the mainspring slackening.

9 ACCEPTANCE CERTIFICATE

The IZH-53M Air Pistol No. _____ complies with the criminalistical requirements of the Internal Affairs Ministry of Russia and found fit for service.
The IZH-53M Air Pistol has been certified for conformity to the safety requirements by the Safety Certificate POCC RU.ÌÆ03.B00668, which is valid from April 01, 2004 to March 31, 2007.

The Certificate has been granted by the Service/Civilian Weapons and Ammunition Certification Agency of Udmurt Standardization and Metrology Centre, reg. No. POCC RU.0001.11ÌÆ03.
Date of manufacture
_____
Accepted by _____

10 PRESERVATION AND STORAGE CONDITIONS

The IZH-53M Air Pistol No. _____ has been given a preservative treatment.
Date of preservation _____
Preservation term up to represervation _____ months
Preserved by _____
The pistol should be stored in closed rooms or in other accomodations provided with natural ventilation, located in any macroclimatic regions.

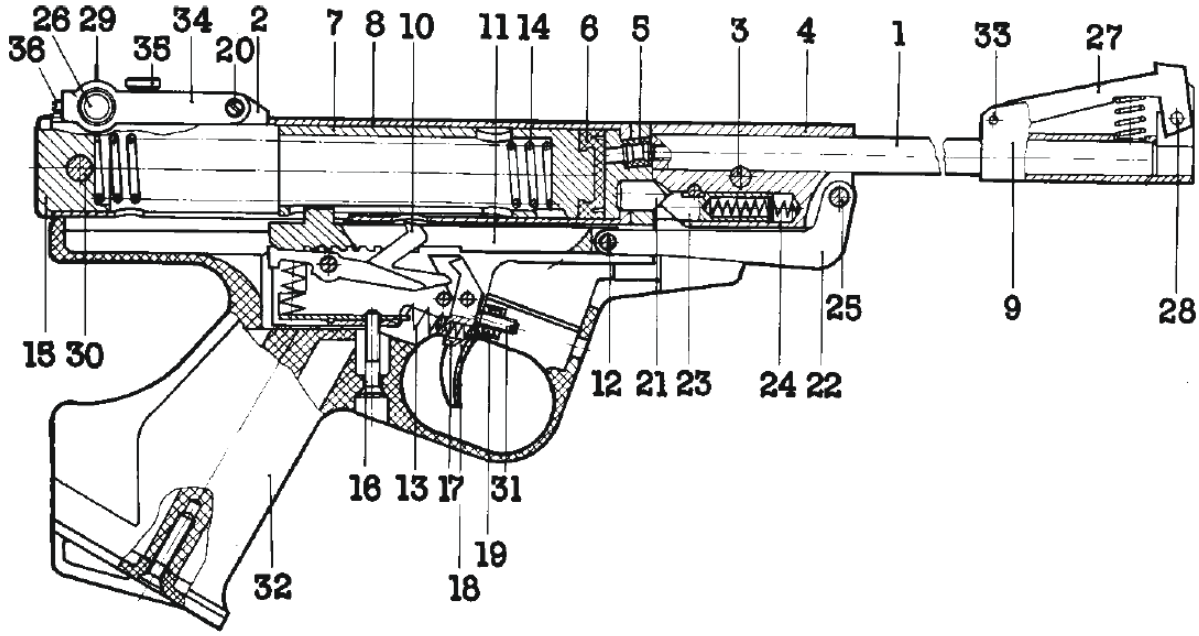

Fig. 2 – Arrangement of the IZH-53M Mechanisms

1– barrel; 2 – rear sight; 3 – barrel pivot; 4 – barrel sleeve; 5 – barrel gasket; 6 – piston cup; 7 – piston; 8 – receiver; 9 – front sight base; 10 – sear; 11 – cocking lever; 12 – pin; 13 – trigger spring; 14 – mainspring; 15 – rear insert; 16 – screw; 17 – trigger sear; 18 – trigger; 19 – fixing gasket; 20 – screw; 21 – latch stop; 22 – hinge; 23 – self-releasing latch; 24 – self-releasing latch spring; 25 – hinge pivot; 26 – screw; 27 – front sight; 28 – front sight pin; 29 – sight leaf; 30 – pin; 31 – trigger

travel adjustment screw; 32 – grip; 33 – front sight pin; 34 – rear sight frame; 35 – adjustment screw; 36 – screw.

Fig. 1 – The IZH-53M Air Pistol